Aacer LongBond™ I

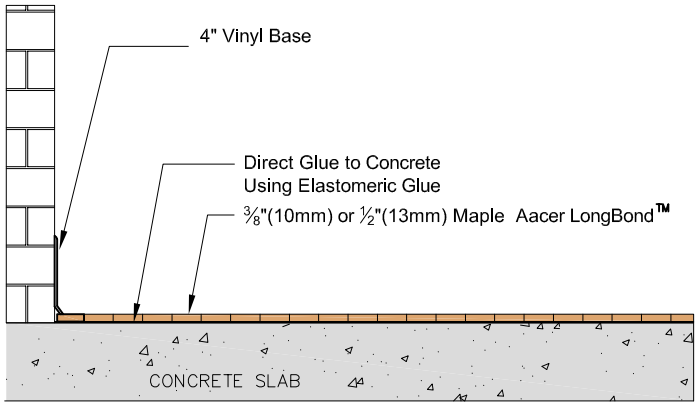

Wall Base

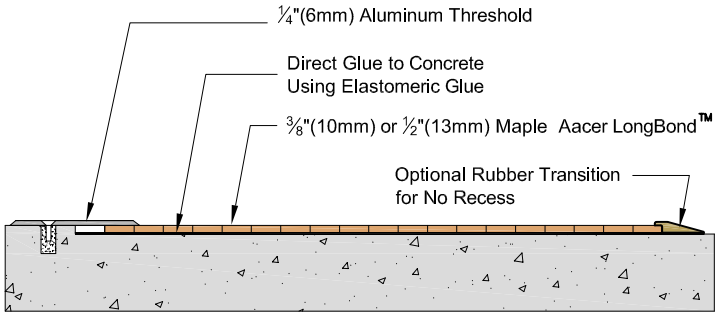

Threshold

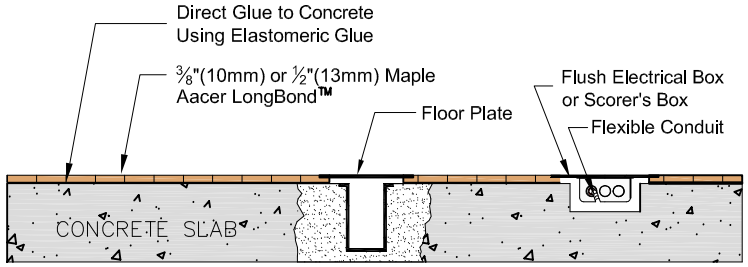

REVISIONS

I.D.	DESCRIPTION	WHEN	WHO
—			

Aacer Flooring
970 Ogden Rd
Peshtigo, Wi 54157

Phone: 715-582-1181
Fax: 715-582-1182

AACER SPORTS FLOORING

DESCRIPTION: Aacer LongBond™ I			
PART NUMBER:	DATE: 9-14-2010	FILE: aacerLongBondIDetails	
SCALE: n/a	DRAWN BY: S Daniel	SHEET: 1	
	CHECKED BY:		